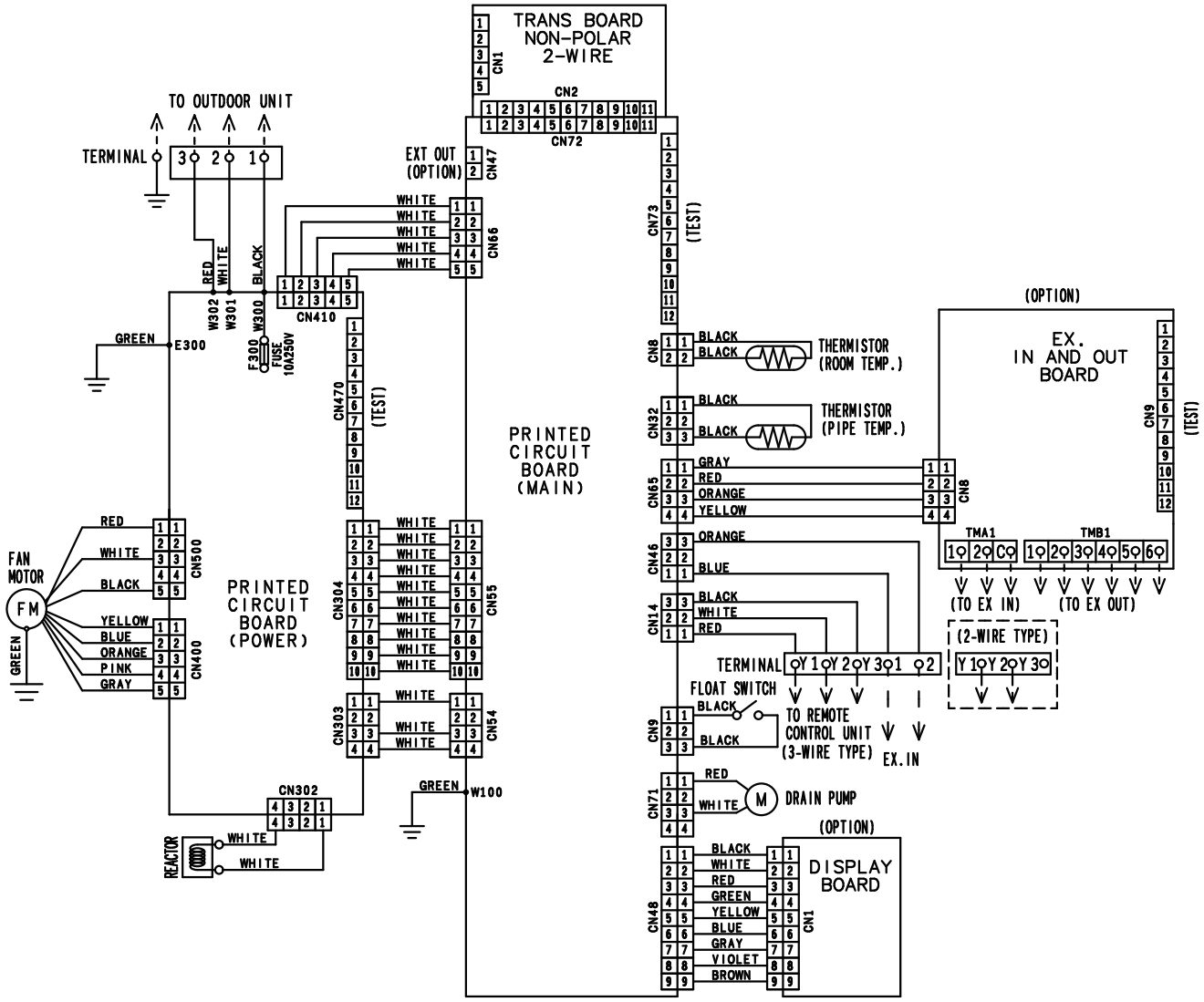# 3-2. Models: ARXG30KHTAP, ARXG36KHTAP, ARXG45KHTAP, and ARXG54KHTAP