5-5. Low static pressure duct (Mini duct) type
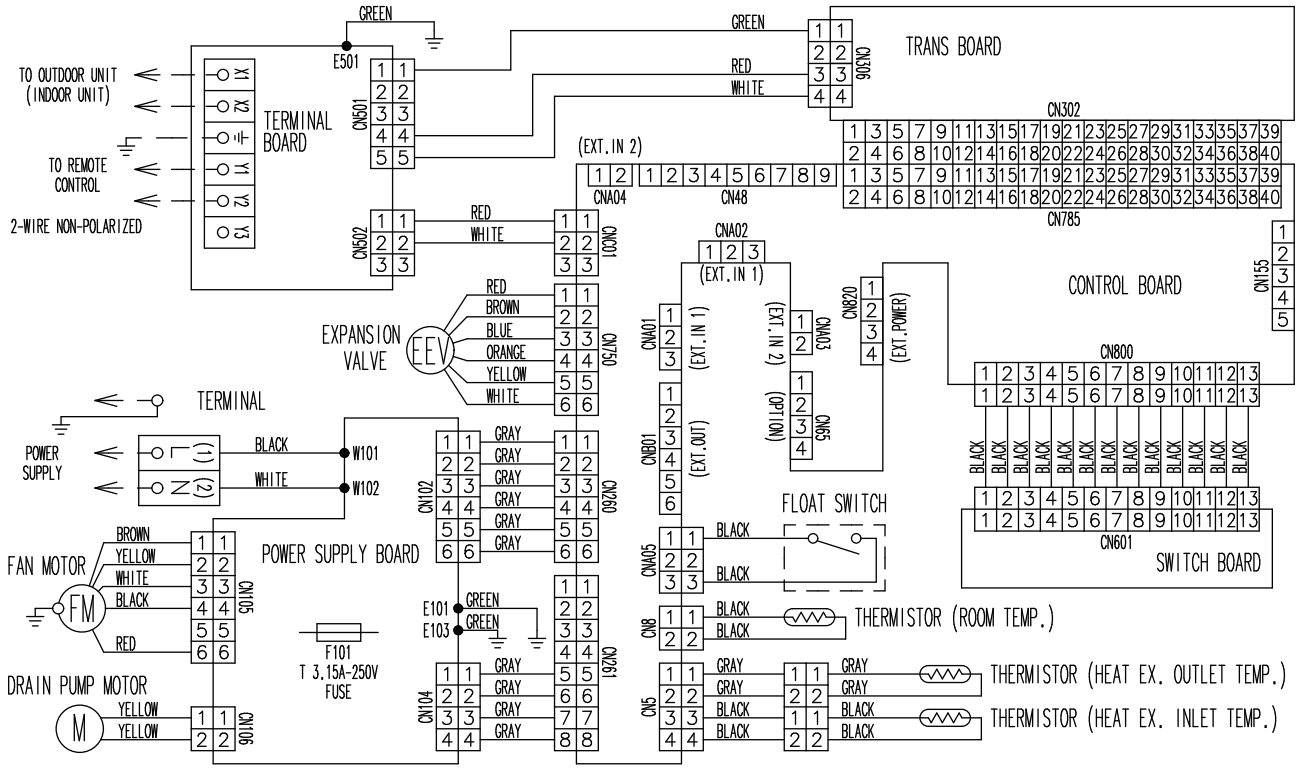
■ Models: ARXK004GLGH, ARXK007GLGH, ARXK009GLGH, ARXK012GLGH, ARXK014GLGH, ARXK018GLGH and ARXK024GLGH