3. Wiring diagrams
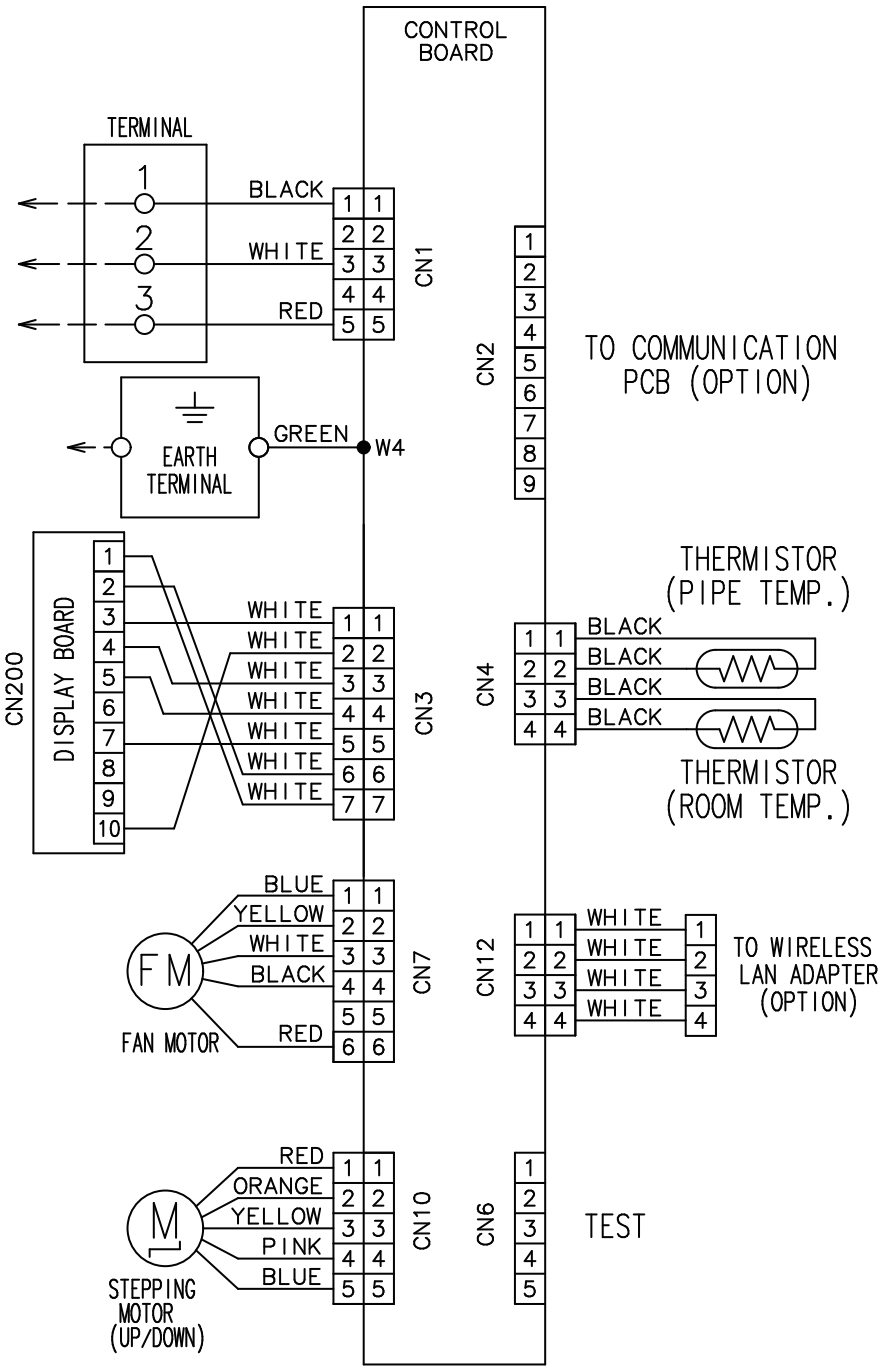
3-1. Models: ASYG07KMCC, ASYG09KMCC, ASYG12KMCC, and ASYG14KMCC