4. DIMENSIONS

■ MODEL: AS∗G18LF, AS∗G24LF, AS∗G30LF

(Unit : mm)

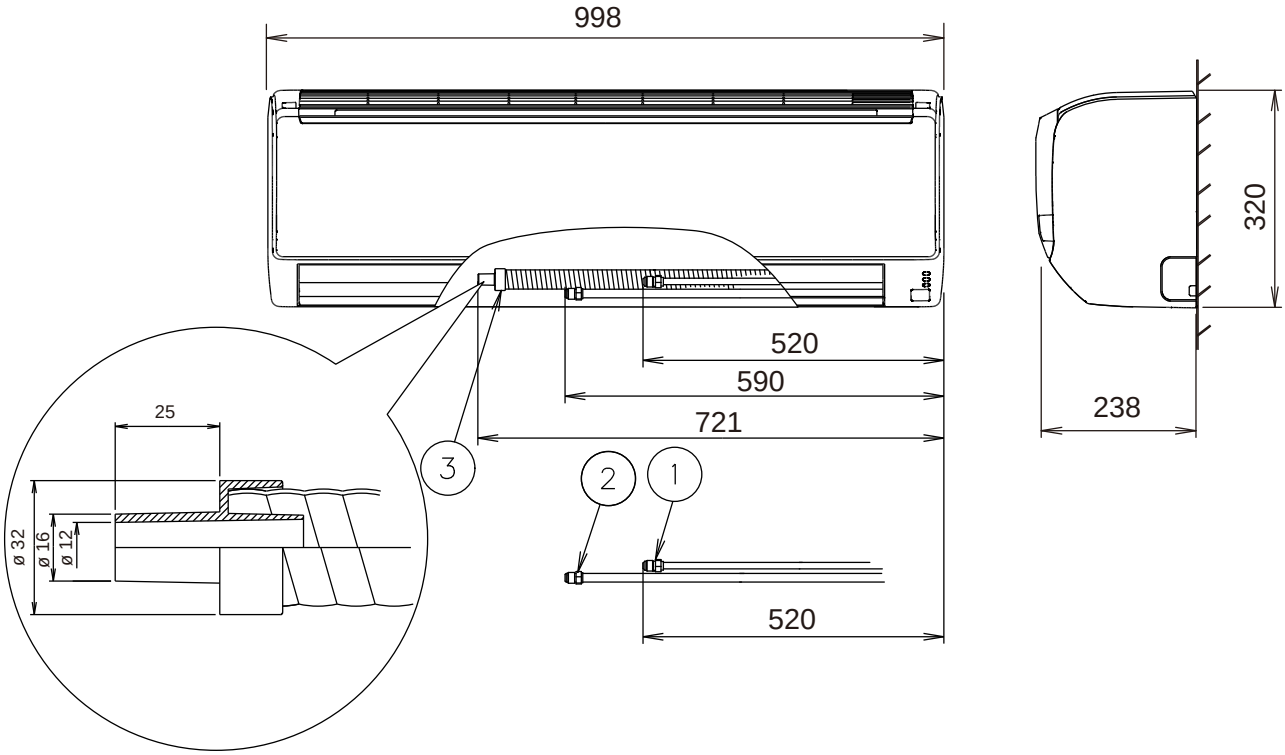

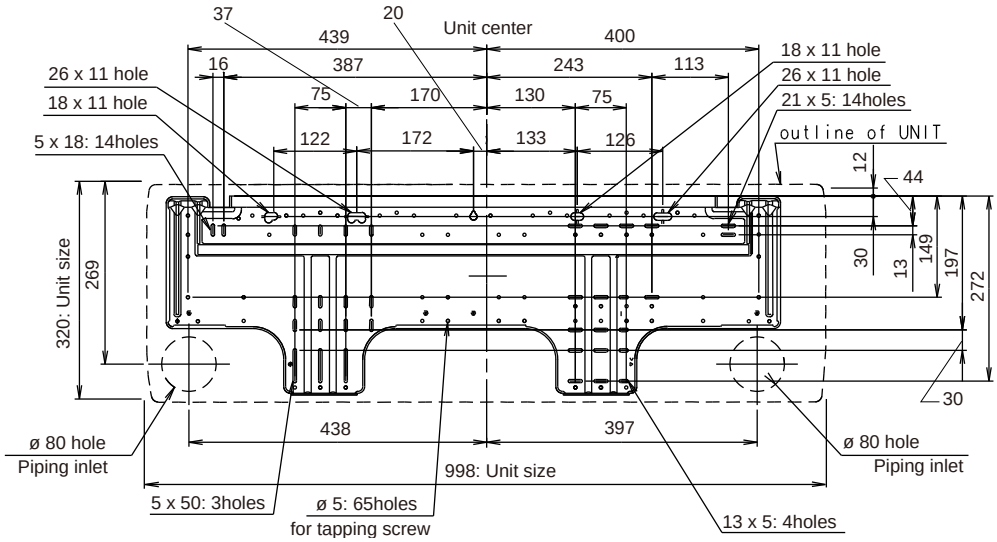

			AS∗G18LF	AS∗G24LF	AS∗G30LF
①	Refrigerant pipe flare connection	Liquid	ø 6.35 mm (1/4 in.)		ø 9.52 mm (3/8 in.)
②		Gas	ø 12.7 mm (1/2 in.)	ø 15.88 mm (5/8 in.)	
③	Drain hose connection	Drain hose	I.D. 12 mm, O.D. 16 mm Drain hose : L=670 mm		

WALL MOUNTED TYPE
AS∗G18-30LF

■ INSTALLATION PLACE
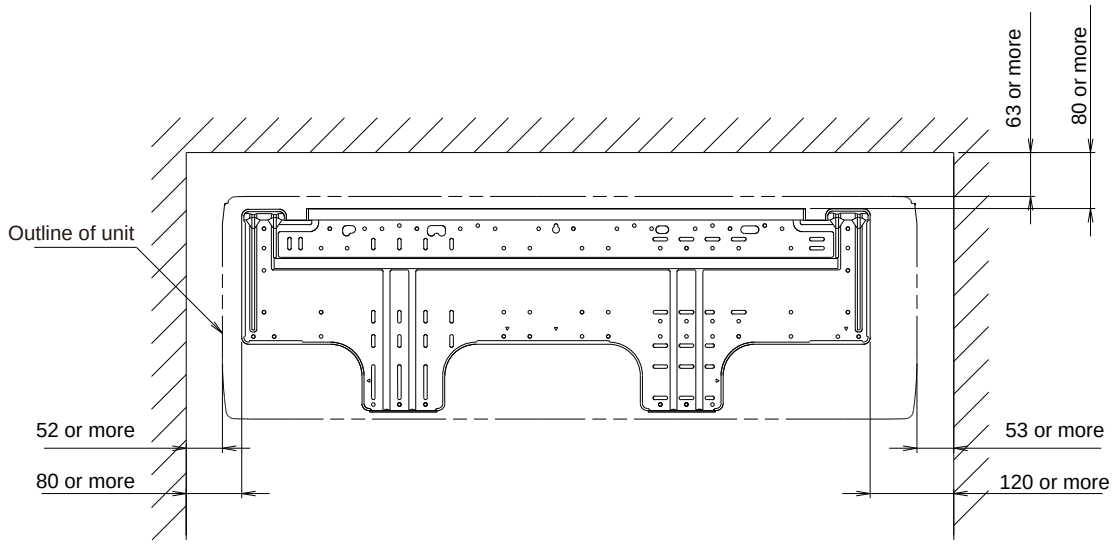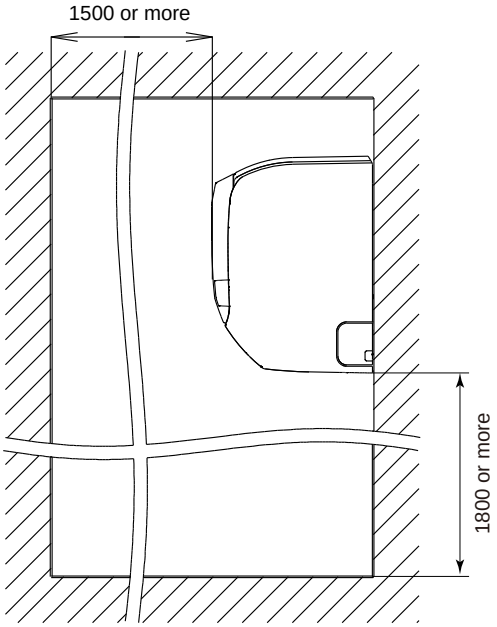
(Unit : mm)